# Stop valve with bellow seals

**Model 248**

EN ASME/ANSI

Stop valve with bellow seals, maintenance-free, designed with external spindle and support guide, thus avoiding the atmospheric emissions of conventional valves.
Works with: steam, hot and superheated water, thermal oil, process water, gases, glycol, compressed air, neutral fluids, etc.
Applications in: process industry, shipbuilding, air conditioning systems, thermal oil installations and systems, vacuum installations ... etc.
In accordance with the requirements of the pressure equipment directive 2014/68/EU.

**Specifications**

— Design and manufacture compliant with EN 13709.
— Distances between flanges compliant with EN 558 series 1 and ASME B16.10.
— Flanges compliant with EN 1092-1, EN 1092-2 and ASME B16.5.
— Designed to be environmentally friendly.
— Materials carefully selected for wear, temperature and corrosion resistance.
— Valve free from silicones and asbestos.
— Simple construction.
— Easy installation with mounting possible at any position between 270º and 90º.
— Internal body designed to offer favourable flow profile.
— Long life cycle with high operating efficiency.
— Practically maintenance-free.
— Spindle with opening indicator, locking mechanism, torque limiter and greasing nipple.
— Spindle with external thread which allows higher working temperatures and a longer service life.
— Safety seals with high-quality graphite rings. They guarantee total prevention of atmospheric emissions in the unlikely event of a bellows breakage. This is a requirement of DIN Standard 4754 in thermal fluid installations.
— Removable gasket designed to avoid the transmission of vibration to the valve's spindle.
— Double-walled bellows, robust, welded to the spindle forming a water-tight assembly, next to the seal and disc, without any possibility of rotation so as to avoid breakages. The bellows disc is concave and joined to the bellows. This saves energy and contributes to the area round the valve handle being at a suitable temperature for operator safety.
— Stainless steel bellows welded to the plasma. Airtightness tested with helium, ensuring absolute reliability and long life.
— Reinforced support guide in a bridge design which provides thermal insulation.
— Ergonomic handle with protective cap for the spindle.
— In accordance with the safety specifications, the valve is an inseparable part of the set. When attaching the valve to any point of opening or closure, external blocking systems must be used, and the handwheel must never be dismantled.
— Treated closing surfaces, which are grinded, lapped and burnished in order to achieve a degree of leak-tightness that even exceeds that required by EN 12266-1 class A.
— All the valves are rigorously tested and verified.
— All components are numbered, registered and checked. If requested in advance, material, casting, test and efficiency certificates will be enclosed with the valve, and with the instruction manual, in accordance with P.E.D. 2014/68/EU.

IMPORTANT
We recommend, if necessary, the use of thermal and acoustic insulation textile jackets Model 008.
On order:
— Option for manufacturing in other materials for special working conditions (high temperatures, fluids, etc).
— Other connections.
— Gasket with regulating cone.
— Soft gaskets.

| Nº PIECE | PIECE | NODULAR IRON | CAST STEEL | ACERO INOXIDABLE |
|---|---|---|---|---|
| 1 | Body | Nodular iron (EN-5.3103) | Cast steel (EN-1.0619) | Stainless steel (EN-1.4408) |
| 2 | Seat | Stainless steel (EN-1.4021) | Stainless steel (EN-1.4021) | Stainless steel (EN-1.4408) |
| 3 | Plug | Stainless steel (EN-1.4021) | Stainless steel (EN-1.4021) | Stainless steel (EN-1.4401) + Stellite nº6 |
| 4 | Pin | Stainless steel (EN-1.4301) | Stainless steel (EN-1.4301) | Stainless steel (EN-1.4401) |
| 5 | Rod | Stainless steel (EN-1.4021) | Stainless steel (EN-1.4021) | Stainless steel (EN-1.4401) |
| 6 | Bellow | Stainless steel (EN-1.4301) | Stainless steel (EN-1.4301) | Stainless steel (EN-1.4404) |
| 7 | Bellow disc | Stainless steel (EN-1.4301) | Stainless steel (EN-1.4301) | Stainless steel (EN-1.4401) |
| 8 | Gasket body | Graphite + Stainless steel (EN-1.4301) | Graphite + Stainless steel (EN-1.4301) | Graphite + Stainless steel (EN-1.4401) |
| 9 | Guide support | Nodular iron (EN-5.3103) | Cast steel (EN-1.0619) | Stainless steel (EN-1.4408) |
| 10 | Bolt/Screw | Cast steel (EN-1.1191) | Cast steel (EN-1.1191) | Stainless steel (EN-1.4401) |
| 11 | Nut | - | Cast steel (EN-1.1141) | Stainless steel (EN-1.4401) |
| 12 | Packing | Graphite | Graphite | Graphite |
| 13 | Stuffing box | Cast steel (EN-1.1191) | Cast steel (EN-1.1191) | Stainless steel (EN-1.4305) |
| 14 | Pin | Cast steel (EN-1.1231) | Cast steel (EN-1.1231) | Stainless steel (EN-1.4301) |
| 15 | Removable lock washer | Cast steel (EN-1.0037) | Cast steel (EN-1.0037) | Stainless steel (EN-1.4301) |
| 16 | Insert nut | Cast steel (EN-1.1191) | Cast steel (EN-1.1191) | Bras (EN-CW617N) |
| 17 | Grease fitting | Bras (EN-CW617N) | Bras (EN-CW617N) | Bras (EN-CW617N) |
| 18 | Handwheel | Cast steel (EN-1.0517) | Cast steel (EN-1.0517) | Cast steel (EN-1.0517) |
| 19 | Cap | Cast steel (EN-1.1191) | Cast steel (EN-1.1191) | Cast steel (EN-1.1191) |
| 20 | Shim ring | Stainless steel (EN-1.4301) | Stainless steel (EN-1.4301) | Stainless steel (EN-1.4301) |
| 21 | Plate | Aluminium | Aluminium | Aluminium |
| | DN | 15 to 300 (EN, ANSI) | | |
| | PN | 16 | 40 | 40 |
| OPERATING CONDITIONS | PRESSURE IN bar | 16,00 / 15,50 / 14,70 / 11,20 | 40,00 / 37,10 / 33,30 / 23,80 | 40,00 / 40,00 / 33,70 / 27,40 |
| | TEMP.MAX.EN ºC | *RT / 150 / 200 / 350 | *RT / 100 / 200 / 400 | *RT / 100 / 200 / 400 |
| | TEMP.MIN.EN ºC | -10 | -20 | -40 |

| MODEL | | 248 | | | | | | | | | | | | | | | | | | | |
|---|---|---|---|---|---|---|---|---|---|---|---|---|---|---|---|---|---|---|---|---|---|
| DN | | 15 | | | | 20 | | | | 25 | | | | 32 | | | | 40 | | | |
| NPS | | 1/2" | | | | 3/4" | | | | 1" | | | | 1 1/4" | | | | 1 1/2" | | | |
| CONNECTIONS | | I - Flanges PN-16 EN 1092-2 | | | | | | | | | | | | | | | | | | | |
| | | II - Flanges PN-40 EN 1092-1 | | | | | | | | | | | | | | | | | | | |
| | | III - Flanges Class 150 lbs ASME / ANSI B16.5 | | | | | | | | | | | | | | | | | | | |
| | | IV - Flanges Class 300 lbs ASME / ANSI B16.5 | | | | | | | | | | | | | | | | | | | |
| H (PN16, PN40) | | 192 | | | | 192 | | | | 207 | | | | 207 | | | | 245 | | | |
| H (class 150 lbs and 300 lbs) | | 240 | | | | 240 | | | | 256 | | | | 267 | | | | 325 | | | |
| L EN-558 (PN-16, PN40) | | 130 | | | | 150 | | | | 160 | | | | 180 | | | | 200 | | | |
| L ASME B16.10 (class 150 lbs) | | 108 | | | | 117 | | | | 127 | | | | 140 | | | | 165 | | | |
| L ASME B16.10 (class 300 lbs) | | 152 | | | | 178 | | | | 203 | | | | 216 | | | | 229 | | | |
| B | | 140 | | | | 140 | | | | 160 | | | | 160 | | | | 180 | | | |
| | | I | II | III | IV | I | II | III | IV | I | II | III | IV | I | II | III | IV | I | II | III | IV |
| D | | 95 | 95 | 90 | 95 | 105 | 105 | 100 | 115 | 115 | 115 | 110 | 125 | 140 | 140 | 115 | 135 | 150 | 150 | 125 | 155 |
| K | | 65,00 | 65,00 | 60,30 | 66,70 | 75,00 | 75,00 | 69,90 | 82,60 | 85,00 | 85,00 | 79,40 | 88,90 | 100,00 | 100,00 | 88,90 | 98,40 | 110,00 | 110,00 | 98,40 | 114,30 |
| l | | 14,00 | 14,00 | 15,90 | 15,90 | 14,00 | 14,00 | 15,90 | 19,10 | 14,00 | 14,00 | 15,90 | 19,10 | 19,00 | 18,00 | 15,90 | 19,10 | 19,00 | 18,00 | 15,90 | 22,20 |
| b | | 14,00 | 16,00 | 11,20 | 14,30 | 16,00 | 18,00 | 12,70 | 15,90 | 16,00 | 18,00 | 14,30 | 17,50 | 18,00 | 18,00 | 15,90 | 19,10 | 19,00 | 18,00 | 17,50 | 20,70 |
| DRILLS Nº | | 4 | | | | 4 | | | | 4 | | | | 4 | | | | 4 | | | |
| WEIGHT IN kgs. | NODULAR IRON | 3,80 | | - | | 4,40 | | - | | 5,60 | | - | | 7,10 | | - | | 9,10 | | - | |
| | CAST STEEL | 4,20 | | 4,00 | 5,00 | 4,80 | | 6,00 | 7,00 | 6,20 | | 8,00 | 10,00 | 7,80 | | 12,00 | 14,00 | 10,00 | | 16,00 | 19,00 |
| | STAINLESS STEEL | | | | | | | | | | | | | | | | | | | | |
| CODE 2005-248. | NODULAR IRON | 5026 | - | - | - | 5346 | - | - | - | 5106 | - | - | - | 5146 | - | - | - | 5126 | - | - | - |
| | CAST STEEL | - | 8024 | 80241 | 80242 | - | 8344 | 83441 | 83442 | - | 8104 | 81041 | 81042 | - | 8144 | 81441 | 81442 | - | 8124 | 81241 | 81242 |
| | STAINLESS STEEL | - | 8022 | 80221 | 80222 | - | 8342 | 83421 | 83422 | - | 8102 | 81021 | 81022 | - | 8142 | 81421 | 81422 | - | 8122 | 81221 | 81222 |

* Casting
** Forging

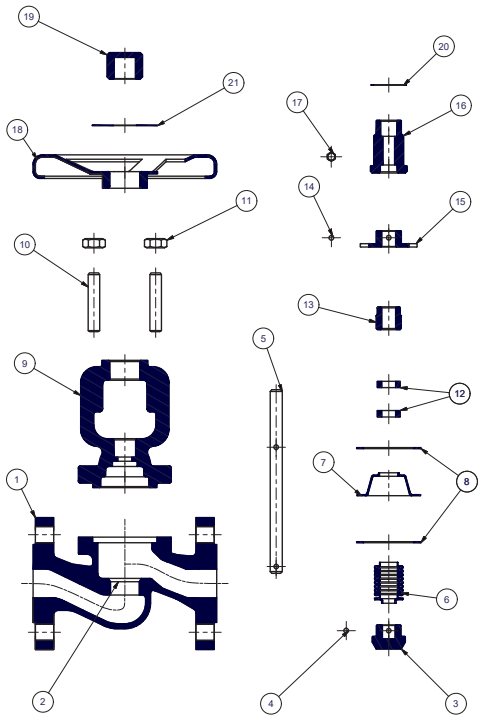


*Room Temperature (-10 ºC to 50 ºC).

ADDITIONAL RESTRICTIONS:
PN-40 DN-125 PMS-33 bar
PN-40 DN-150 to 300 PMS-21 bar

| FLOW COEFFICIENT EN 60534-2-3 Water at 20ºC | |
|---|---|
| DN | Kvs m3/h Δp= 1 bar |
| 15 | 4,70 |
| 20 | 6,80 |
| 25 | 11,40 |
| 32 | 16,30 |
| 40 | 29,00 |
| 50 | 43,50 |
| 65 | 74,00 |
| 80 | 109,00 |
| 100 | 172,00 |
| 125 | 277,00 |
| 150 | 408,00 |
| 200 | 708,00 |

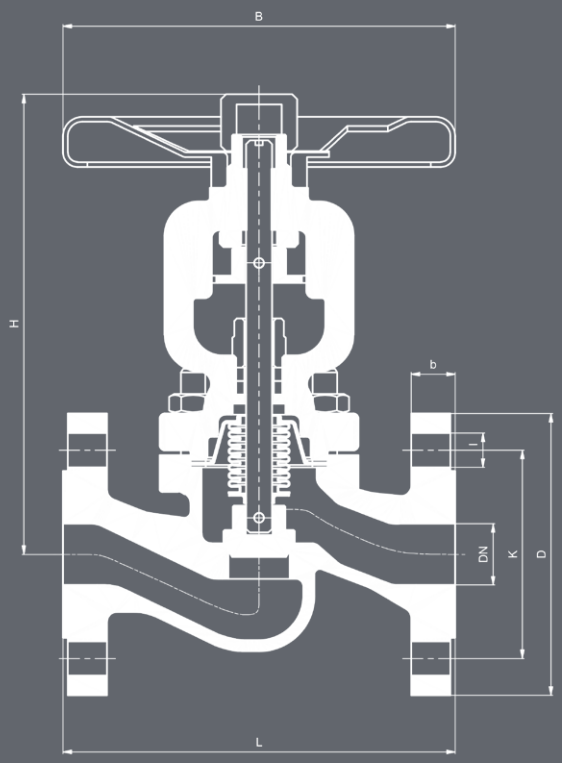


| | | | | | | | | | | | | | | | | | | | | | | | | | | | |
|---|---|---|---|---|---|---|---|---|---|---|---|---|---|---|---|---|---|---|---|---|---|---|---|---|---|---|---|
| 248 | | | | | | | | | | | | | | | | | | | | | | | | | | | |
| 50 | | | | 65 | | | | 80 | | | | 100 | | | | 125 | | | | 150 | | | | 200 | | | |
| 2" | | | | 2 1/2" | | | | 3" | | | | 4" | | | | 5" | | | | 6" | | | | 8" | | | |
| I - Flanges PN-16 EN 1092-2 | | | | | | | | | | | | | | | | | | | | | | | | | | | |
| II - Flanges PN-40 EN 1092-1 | | | | | | | | | | | | | | | | | | | | | | | | | | | |
| III - Flanges Class 150 lbs ASME / ANSI B16.5 | | | | | | | | | | | | | | | | | | | | | | | | | | | |
| IV - Flanges Class 300 lbs ASME / ANSI B16.5 | | | | | | | | | | | | | | | | | | | | | | | | | | | |
| 253 | | | | 295 | | | | 328 | | | | 385 | | | | 427 | | | | 480 | | | | 672 | | | |
| *315/**348 | | | | 330 | | | | 380 | | | | 405 | | | | 455 | | | | 513 | | | | 683 | | | |
| 230 | | | | 290 | | | | 310 | | | | 350 | | | | 400 | | | | 480 | | | | 600 | | | |
| 203 | | | | 216 | | | | 241 | | | | 292 | | | | 356 | | | | 406 | | | | 495 | | | |
| 267 | | | | 292 | | | | 318 | | | | 356 | | | | 400 | | | | 444 | | | | 559 | | | |
| 200 | | | | 220 | | | | 250 | | | | 300 | | | | 350 | | | | 400 | | | | 450 | | | |
| I | II | III | IV | I | II | III | IV | I | II | III | IV | I | II | III | IV | I | II | III | IV | I | II | III | IV | I | II | III | IV |
| 165 | 165 | 150 | 165 | 185 | 185 | 180 | 190 | 200 | 200 | 190 | 210 | 220 | 235 | 230 | 255 | 250 | 270 | 255 | 280 | 285 | 300 | 280 | 320 | 340 | 375 | 345 | 380 |
| 125,00 | 125,00 | 120,70 | 127,00 | 145,00 | 145,00 | 139,70 | 149,20 | 160,00 | 160,00 | 152,40 | 168,30 | 180,00 | 190,00 | 190,50 | 200,00 | 210,00 | 220,00 | 215,90 | 235,00 | 240,00 | 250,00 | 241,30 | 269,90 | 295,00 | 320,00 | 298,50 | 330,20 |
| 19,00 | 18,00 | 19,10 | 19,10 | 19,00 | 18,00 | 19,10 | 22,20 | 19,00 | 18,00 | 19,10 | 22,20 | 19,00 | 22,00 | 19,10 | 22,20 | 19,00 | 26,00 | 22,20 | 22,20 | 23,00 | 26,00 | 22,20 | 22,20 | 23,00 | 30,00 | 22,20 | 26,00 |
| 19,00 | 20,00 | 19,10 | 22,30 | 19,00 | 22,00 | 22,30 | 25,40 | 19,00 | 24,00 | 23,90 | 28,60 | 19,00 | 24,00 | 23,90 | 31,80 | 19,00 | 26,00 | 23,90 | 35,00 | 19,00 | 28,00 | 25,40 | 36,60 | 20,00 | 34,00 | 28,60 | 41,70 |
| 4 | | | 8 | 4 | 8 | 4 | 8 | 8 | | 4 | 8 | 8 | | | | 8 | | | | 8 | | | 12 | 12 | | 8 | 12 |
| 11,80 | | - | | 20,80 | | - | | 27,00 | | - | | 39,10 | | - | | 54,60 | 61,90 | - | | 78,70 | 85,10 | - | | 157,00 | 164,30 | - | |
| 13,00 | | 21,00 | 26,00 | 22,80 | | 29,00 | 38,00 | 29,70 | | 35,00 | 51,00 | 43,00 | | 58,00 | 76,00 | 60,00 | 68,00 | 78,00 | 125,00 | 86,50 | 93,50 | 104,00 | 173,00 | 172,50 | 180,50 | 162,00 | 297,00 |
| 5206 | - | - | - | 5226 | - | - | - | 5306 | - | - | - | 5406 | - | - | - | 5506 | - | - | - | 5606 | - | - | - | 5806 | - | - | - |
| - | 8204 | 82041 | 82042 | - | 8224 | 82241 | 82242 | - | 8304 | 83041 | 83042 | - | 8404 | 84041 | 84042 | - | 8504 | 85041 | 85042 | - | 8604 | 86041 | 86042 | - | 8804 | 88041 | 88042 |
| - | 8202 | 82021 | 82022 | - | 8222 | 82221 | 82222 | - | 8302 | 83021 | 83022 | - | 8402 | 84021 | 84022 | - | 8502 | 85021 | 85022 | - | 8602 | 86021 | 86022 | - | 8802 | 88021 | 88022 |

Flow diagram

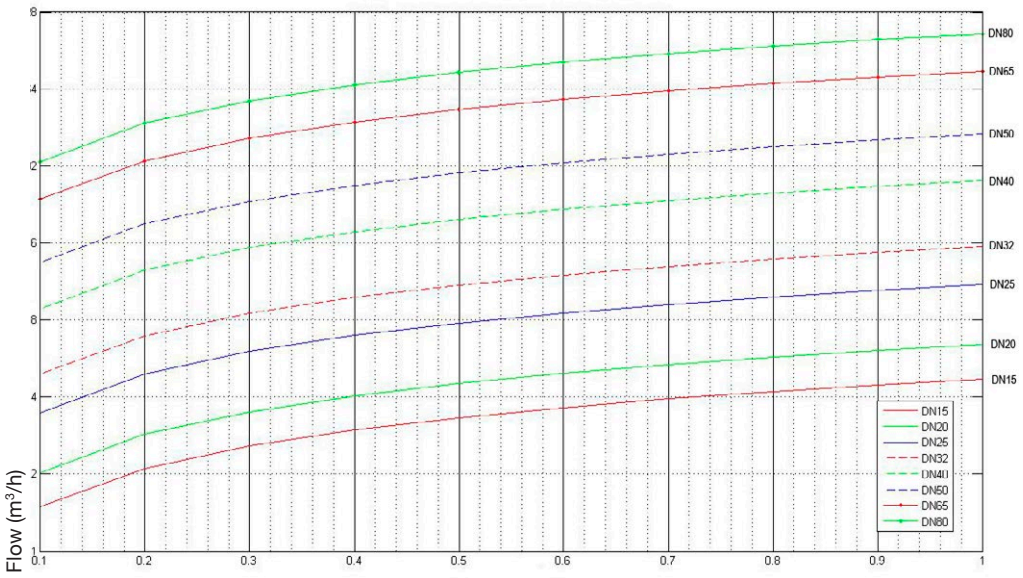


Pressure differential Δp (bar)

Flow diagram

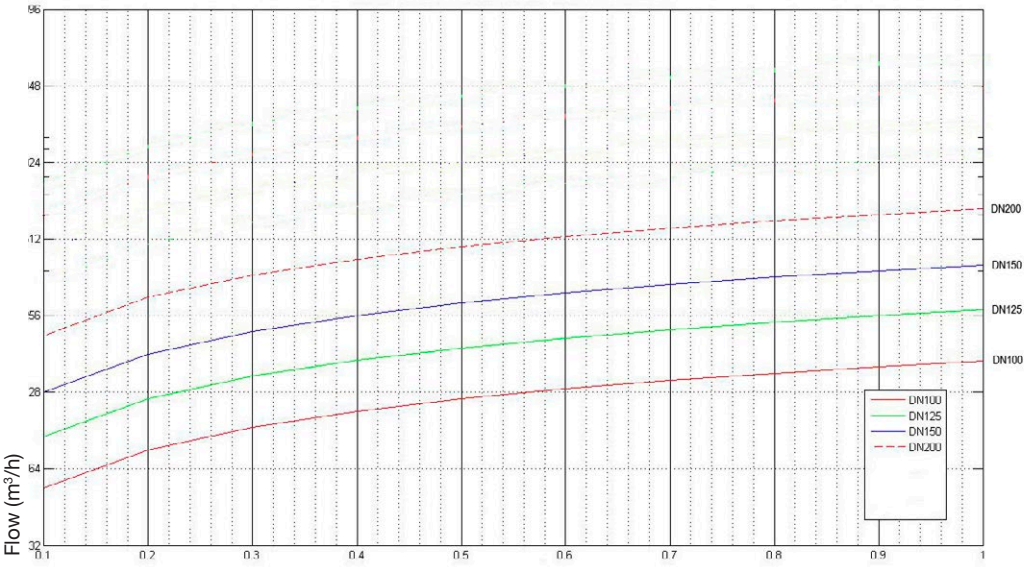


Pressure differential Δp (bar)


www.vycindustrial.com
Avenc del Daví, 22 Pol. Ind. Can Petit 08227 TERRASSA (Barcelona) SPAIN
+34 93 735 76 90 119 info@vycindustrial.com